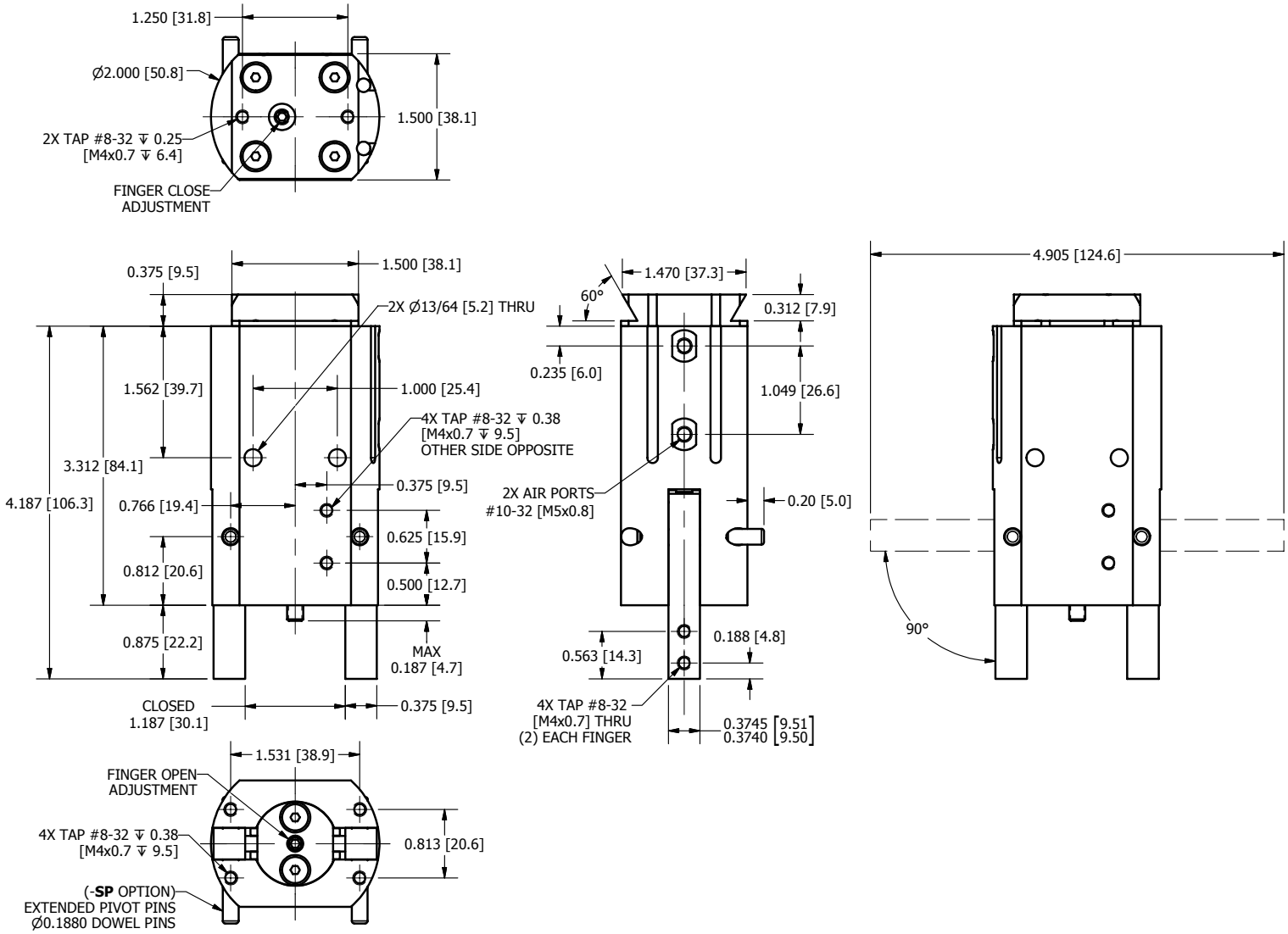

R&I
MANUFACTURING CO.

DURA-GRIP
GH-91