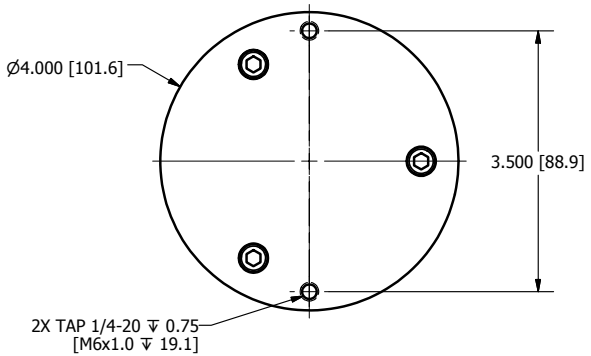

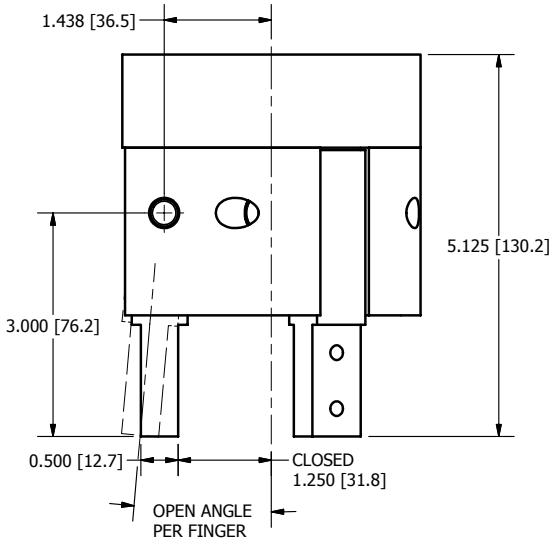

STANDARD ANGLE (SHOWN) - 5˚
(-**W** OPTION) WIDE ANGLE - 10˚
(-**HD** OPTION) HEAVY DUTY - 3.5˚

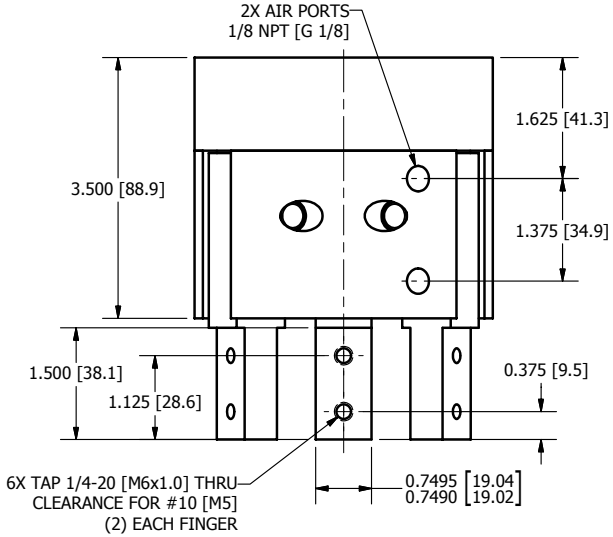

R&I
MANUFACTURING CO., INC

DURA-GRIP
GH-3000A