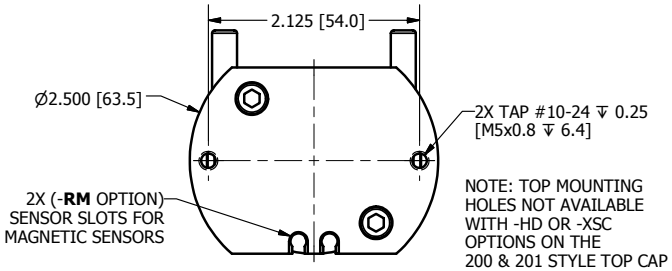

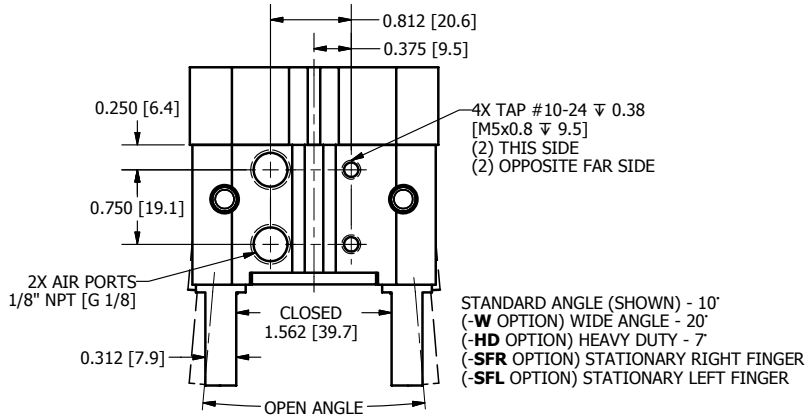

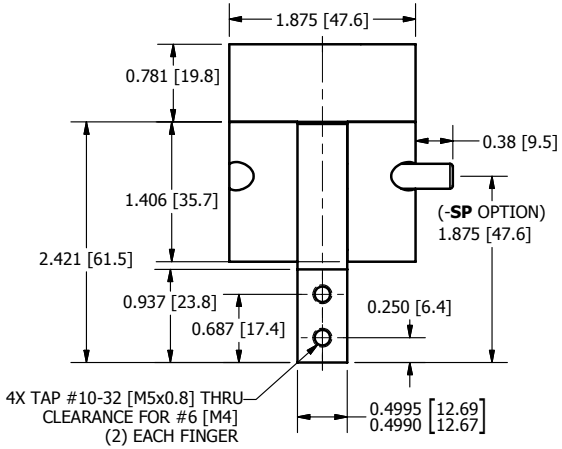

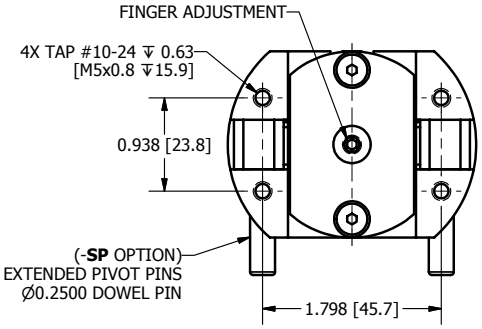

R&I
MANUFACTURING CO., INC

DURA-GRIP
GH-200A