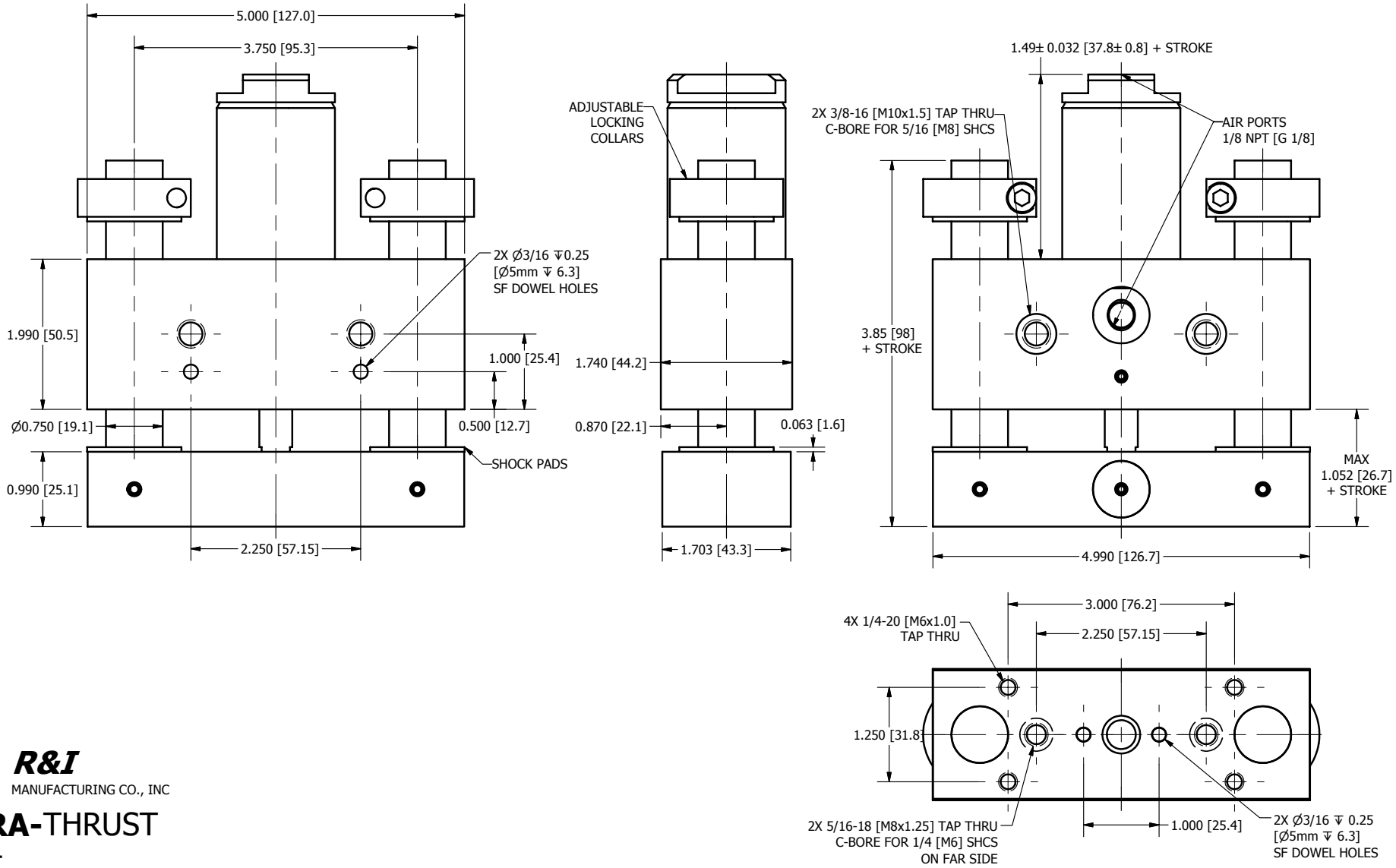

R&I
MANUFACTURING CO., INC

DURA-THRUST
ET-4