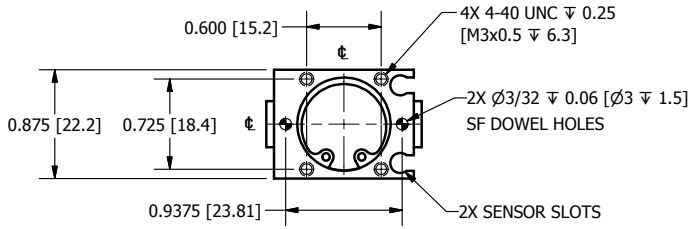

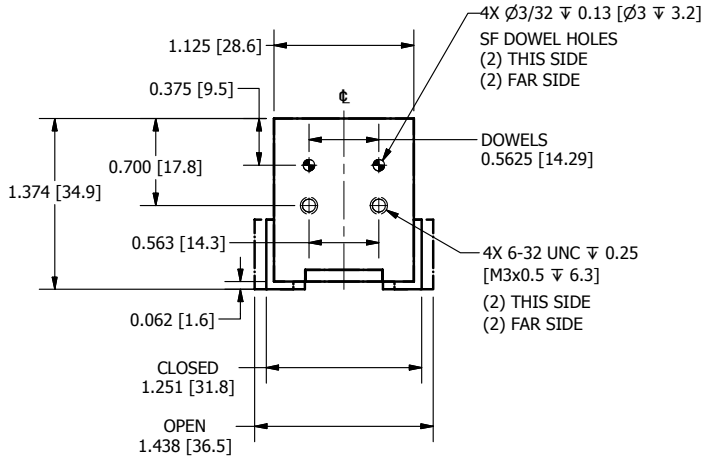

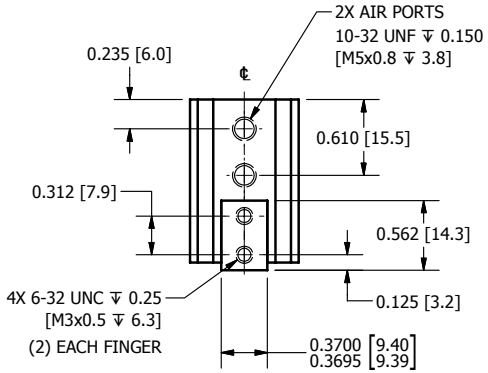

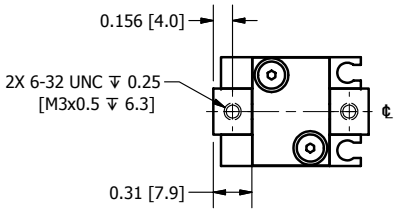

R&I
MANUFACTURING CO.

DURA-GRIP
PH-10