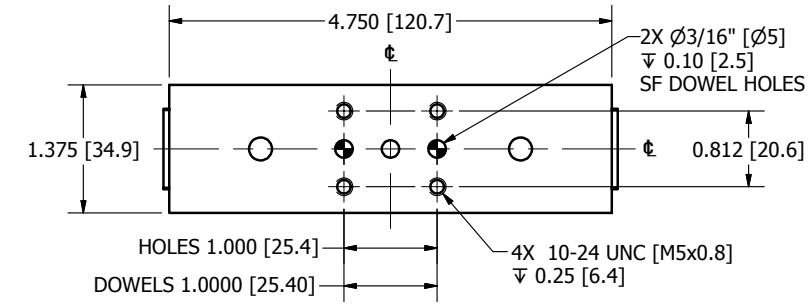

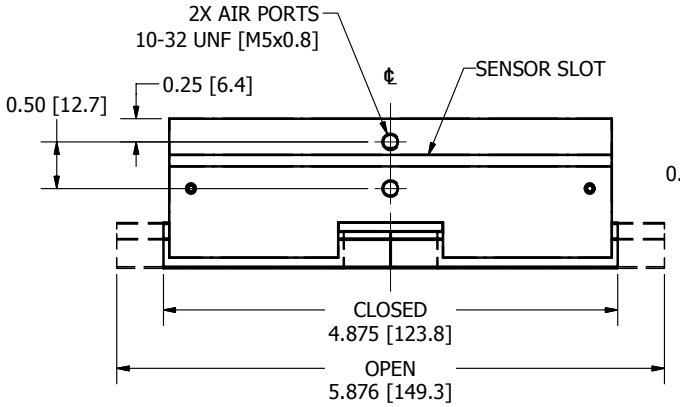

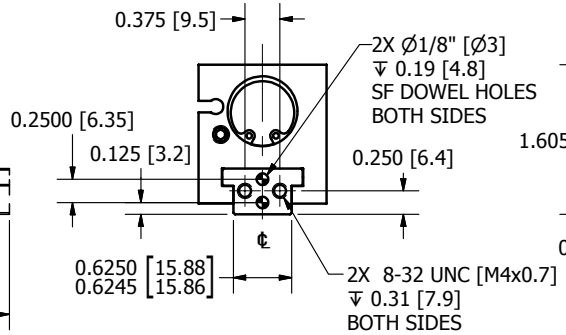

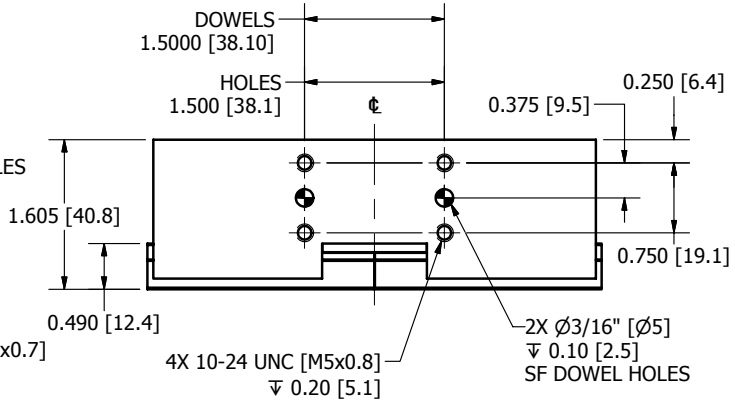

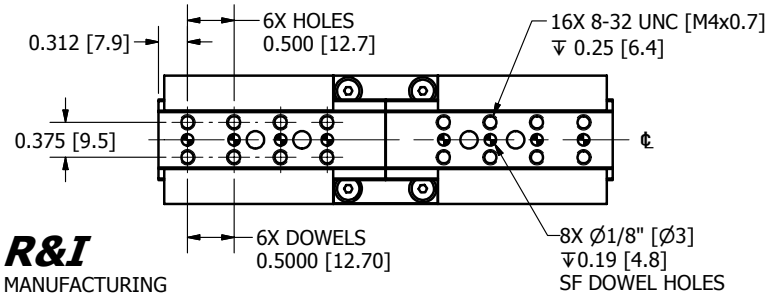

R&I
MANUFACTURING CO.

DURA-GRIP
LP-100